# PEEK-A-BOOM INSTALATION DIAGRAM FOR 1997-2002
# 864 / 1064 SERIES ROGATOR
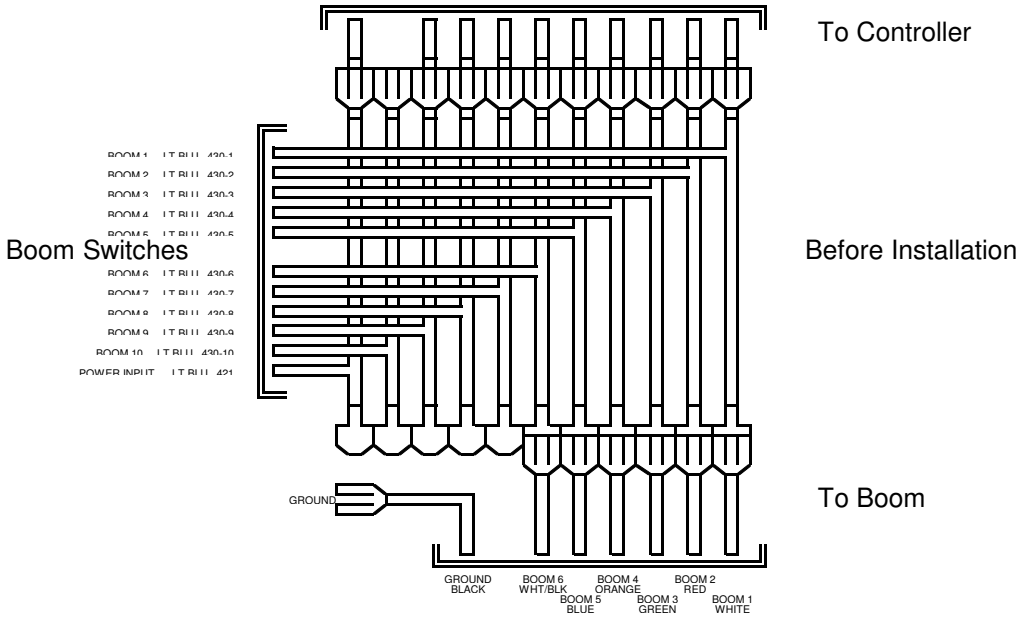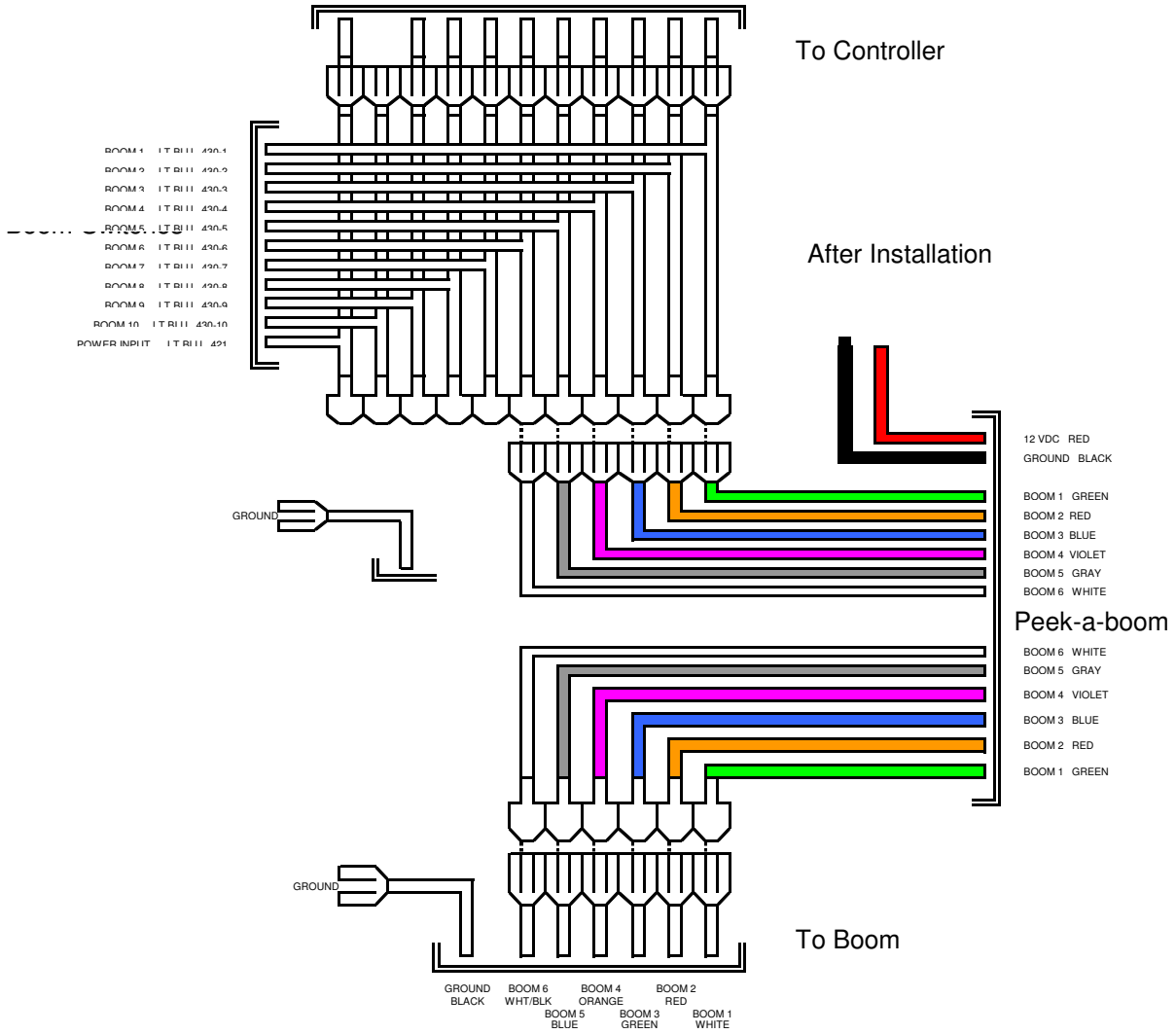
Model # PB3ARG8A